深圳市龙圣电子有限公司

SHENZHEN UNION TOP ELECTRONICS CO., LTD.

APPROVAL SHEET

CUSTOMER: UNP201200022

MODEL : UT15-120040U

SAFETY :

TYPE : Output 12V0.4A Wall Mount Switching Power Supply

P/N : 20120512005

DATE : 2012-05-12

APPROVED BY (PLEASE SIGN BACK)			

COMMENTS		
DESIGN BY	CHECKED BY	APPOVED BY

Tel. : (0755)89600803 Fax. : (0755) 89600969

Address:1st South Building Shilongkeng Industrial Area, Xihua Road, Buji Town, Longgang, Shenzhen

Email:Uniontop@uniontop.com.cn

Http:www.uniontop.com.cn

UNION TOP	Model No.	UT15-120040U	Customer Part No.	

样品说明(SAMPLE DESCRIPTION)

样品用途 THE PURPOSE OF THE SAMPLE	无样板 (NO-SAMPLE)	工作样板 (WORK-SAMPLE)	功能样板 (FUNCTION-SAMPLE)	最终样板 (FINALLY-SAMPLE)
	☐	☐	☐	☑

此次送样后如客人测试 OK,还需继续的事项/

THE ITEMS NEED BE CONTINUED OF THESE SAMPLES CONFIRMED BY CLIENT

EMI 整改/EMI MODIFICATION	安规申请 /SAFETY APPLY	修改 PCB 设计/ PCB MODIFICATION	开模/MOULD			试产 /TRIAL-PRODUCE
			PCB	DC CORD	CASE	
☐	☐	☐	☐	☐	☐	☐

送样材料偏差清单/DIFFERENCE OF THE SAMPLE WITH BOM:

位置编号 POSITION NO.	元件类型 PART TYPE	本次送样实际使用 MATERIAL OF THIS SAMPLE	未来量产应用 MASS-PRODUCTION MATERIAL	备注 REMARK

与上次送样差异描述/DIFFERENCE OF THE SAMPLE WITH BOM:

编号 NO.	上次样品内容 ITEM OF LAST TIME	本次样品改变内容 CHANGED ITEM OF THIS TIME	改变原因 CHANGE REASON
1			
2			
3			
4			
5			

UNION TOP	Model No.	UT15-120040U	Customer Part No.	

Design Revision History

Mark	Description of Change		Reason of Change	Changed Date	Revised By	Approved By
	Before	After				

Table of Contents

NO.	Content		Page
1	SCOPE		5
2	INPUT REQUIREMENTS		5
3	OUTPUT FEATURES		5
4	PROTECTION REQUIREMENT		6
5	ENVIRONMENTAL CONDITIONS		6
6	RELIABILITY AND QUALITY CONTROL		7
7	MECHANICAL CHARACTERISTICS		7
8	SAFETY		7
9	EMC STANDARDS		8
10	OTHER REQUIREMENTS		9
11	APPENDIX		
	APPENDIX A	External View	10
	APPENDIX B	Label diagram	11
	APPENDIX C	DC Cord	12
	APPENDIX D	Packing Drawing	13
	APPENDIX E	Sample Primary Test Report	14
	APPENDIX F	Sample Test Report	15
	APPENDIX G	Energy Star Test Report	16

1. SCOPE

This document details the electrical, mechanical and environmental specifications of a switching power supply.

1.1 Description

☑ **Wall Mount** □ **Desk-Top**

□ **Open Frame** □ **Others**

2. INPUT REQUIREMENTS

2.1 Input Voltage & Frequency

The range of input voltage is from 90Vac **to** 264Vac

	Min	Normal	Max.
Input Voltage	**90Vac**	**100-240Vac**	**264Vac**
Input Frequency	**47Hz**	**50/60Hz**	**63Hz**

2.2 Input current

The maximum input current is 400mA **Max. at** 100-240Vac **.**

2.3 Inrush Current

The inrush current will not exceed 80A **at** 100-240Vac **input and Max load for a cold start at 25℃.**

2.4 Stand-By Power

The input power should be less than 0.3W **with No-Load.**

3. OUTPUT FEATURES

3.1 Output Parameters

	Output Data	Spec. Limit			Test Condition
3.1.1	12Vdc	**Min. Value**	**Typical**	**Max. Value**	
3.1.2	**Output Voltage**	11.4Vdc	12Vdc	12.6Vdc	0 ～0.4A **Loading**
3.1.3	**Output Load**	**0.0A**	—	0.4A	
3.1.4	**Ripple and Noise**	—	—	300mVp-p	**20MHz Bandwidth 10uF Elec. Cap.0.1uF Cer. Cap.**
3.1.5	**Output Overshoot**	—	—	**10%**	**MAX. load & 100-240Vac**

3.2 Turn On Delay

During turn on and turn off, no output voltage shall exceed its nominal voltage by more than 10% and no output shall change its polarity with respect to its return line. All outputs shall reach their steady state values within 3 seconds of turn on.

3.3 Hold Up Time

10 ms minimum at 115Vac/60Hz input at maximum load, and 30 ms minimum at 230Vac/50Hz input at maximum load.

3.4 Typical Efficiency

The efficiency (watts out / watts in) shall be higher than 72.02% typical while measuring at nominal line and maximum load condition, test in 1 minute after power on.

3.5 Output Transient Response

The power supply shall maintain output transient response time within 800mV with a loading current change from 20% to 80% of maximum current and 0.5A/μs rise up /drop down test at end of output terminal.

4. PROTECTION REQUIREMENT

4.1 Over Voltage Protection

Over voltage protection shall be included in the adaptor circuit. A single component failure must not cause an over voltage.

4.2 Over Current Protection

The adaptor must have a current limiting function on the output voltage. in overload mode, the output must drop to a low voltage. The OCP 1.5A max.

4.3 Short Circuit Protection

The adaptor must withstand a continuous short circuit on the output without damage.

5. ENVIRONMENTAL CONDITIONS

5.1 Operating

The power supply shall be capable of operating normally in any mode without malfunction happens in the following environmental conditions.

5.1.1 Operating Temperature: 0℃ ～25℃

Relative Humidity: 5% ～ 95%

Altitude: Sea level to 2,000 m.

5.1.2 Vibration: 1.0mm, 10 –55Hz, 15 minutes per cycle for each axis (X, Y, Z).

5.1.3 Cooling: Natural convection cooling.

5.2 Non - Operating

The power supply shall be capable of withstanding the following environmental conditions extended periods of time, without sustaining electrical or mechanical damage and subsequent operational deficiencies.

5.2.1 Storage Temperature: -20℃ ～ 60℃

5.2.2 Relative Humidity: 5% ～ 95%

5.2.3 Altitude: Sea level to 2,000 m.

5.2.4 Vibration and Shock:

The power supply shall be designed to withstand normal transportation vibration per MIL–STD-810D, method 514 and procedures X, as it is mounted in the chassis assembly and packed for shipping.

6. RELIABILITY AND QUALITY CONTROL

6.1 MTBF

When the power supply is operating within the limits of this specification the MTBF shall be at least 50000 hours at 25℃ (MIL-STD-217F).

6.2 Burn-In

The power supply shall withstand a minimum of 4 hours Burn-In test under full load at 20℃ ~25℃ room temperature, after test, product shall operate normally.

6.3 Component De-rating

Semiconductor junction temperatures shall not exceed the manufacturer's maximum thermal rating.

7. MECHANICAL CHARACTERISTICS

7.1 Physical Dimensions

The detail dimension of the power supply is drawing on APPENDIX B.

7.2 Nameplate

The label of the power supply, please see APPENDIX C.

7.3 Drop test

Dropped freely from 1 m (for wall mount product) height onto the surface is consisted of hardwood 13 mm thick, mounted on two layers of plywood each 19-20 mm thick, all supported on concrete floor 1 time from 3 different surface, after test, it's no safety damage for product.

8. SAFETY

8.1 Safety Standard

The power supply shall be certified under the following international regulatory standards.

Item	Country	Certified	Standard	Present
UL	USA		UL60950-1 2nd	☐
CUL	Canada		CSA C22.2 NO.60950-1	☐
FCC	USA		PART 15 CLASS B	☐
VDE/GS	Europe		EN 60950-1 2nd	☐
CE	Europe		EN 60950-1 2nd	☐
BS/UK	Britain		BS EN 60950-1 2nd	☐
SAA	Australia		AS/NZS 60950-1	☐
CCC	China		GB4943	☐
Ko	Korea		K60950	☐
PSE	Japan		J60950 (H20)	☐
Others				☐

8.2 Insulation Resistance

Input to output: 50 MΩ min. at 500 VDC.

8.3 Dielectric Strength (Hi-Pot)

Primary to Secondary DC4242V or AC3000V 10mA 1 minute for type test, 3 seconds for product.

8.4 Leakage Current

The leakage current shall be less than 0.25mA for Class II when the power supply is operated maximum input voltage and maximum frequency.

9. EMC STANDARDS

9.1 EMI Standards

The power supply shall meet the radiated and conducted emission requirements for EN55022 CLASS B,FCC PART 15 CLASS B.

9.2 EMS Standards(EN55024)

The power supply shall meet the following EMS standards.

9.2.1 IEC61000-4-2 Electrostatic Discharge (ESD)

Static – discharge test by contract or air should be conducted with Static – discharge teeter, energy storage capacitance of 150pF, and discharge resistance of 330Ω. 8KV air discharge, 4KV contact discharge, Performance Criterion B.

9.2.2 IEC61000-4-3 Radiated Electromagnetic Fields(RS)

Radio- frequency Electromagnetic Field Susceptibility Test, RS, 80-1000MHz,3V/m, 80%AM(1KHz), Performance Criterion A.

9.2.3 IEC61000-4-4 Electrical Fast Transient / Burst (EFT)

Power Line to Line: 1KV

Performance Criterion B.

9.2.4 IEC61000-4-5 Lightning Surge Attachment

Lightning Surge voltage of differential and common modes shall be applied across AC input lines and across input and frame ground.

Power Line to Line (Common Mode): 1KV

Power Line & Neutral to Earth (Different Mode): /

9.2.5 IEC61000-4-6 Conducted Radio Frequency Disturbances (CS)

Conducted Radio Frequency Disturbances Test, CS, 0.15-80 MHz, 3V/m, 80%AM, 1KHz, Performance Criterion A.

9.2.6 IEC61000-4-11 Voltage Dips/Short Interruption/Variations

Voltage Dips, 30% reduction- 10ms, Performance Criterion B, 60% Reduction – 100ms, Performance Criterion C, Voltage Interruptions>95% Reduction- 5000ms, Performance Criterion C.

10. OTHER REQUIREMENTS

10.1 Hazardous Substances

The components and used materials shall be in compliance with

- [V] EU Directive 2002/95/EC "RoHS"
- [ ] EU Directive 2002/96/EC "WEEE"

10.2 Energy Efficiency

The power supply shall meet the following EMS standards.

10.2.1 The No-Load power consumption shall be less than 0.3W at input 115/230 Vac.

10.2.2 The average active mode efficiency shall be higher than 72.02% at input 115/230 Vac.

10.2.3 International Efficiency Level /

10.2.4 This power supply is therefore in compliance with the requirements of

- [V] California Energy Commission for external power supplies (CEC)
- [ ] Energy Star requirements for external power supplies(EPS Version 2.0)
- [ ] EU Code of Conduct Energy requirements of external power supplies
- [ ] Australian and New Zealand Energy Performance Requirements for external power supplies (MEPS)
- [ ] China Energy Efficiency requirements for external power supplies (GB20943)

11.TEST MEASURES

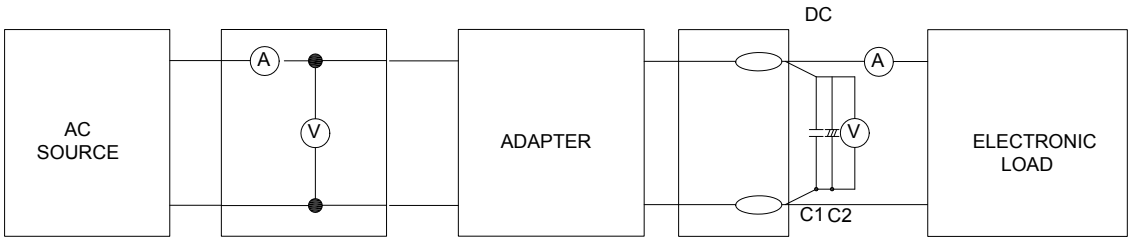

C1 : 0.1Uf CERAMICS CAPACITOR

C2 : 10Uf/50V ALUMINUM CAPACITOR

APPENDIX A

External View

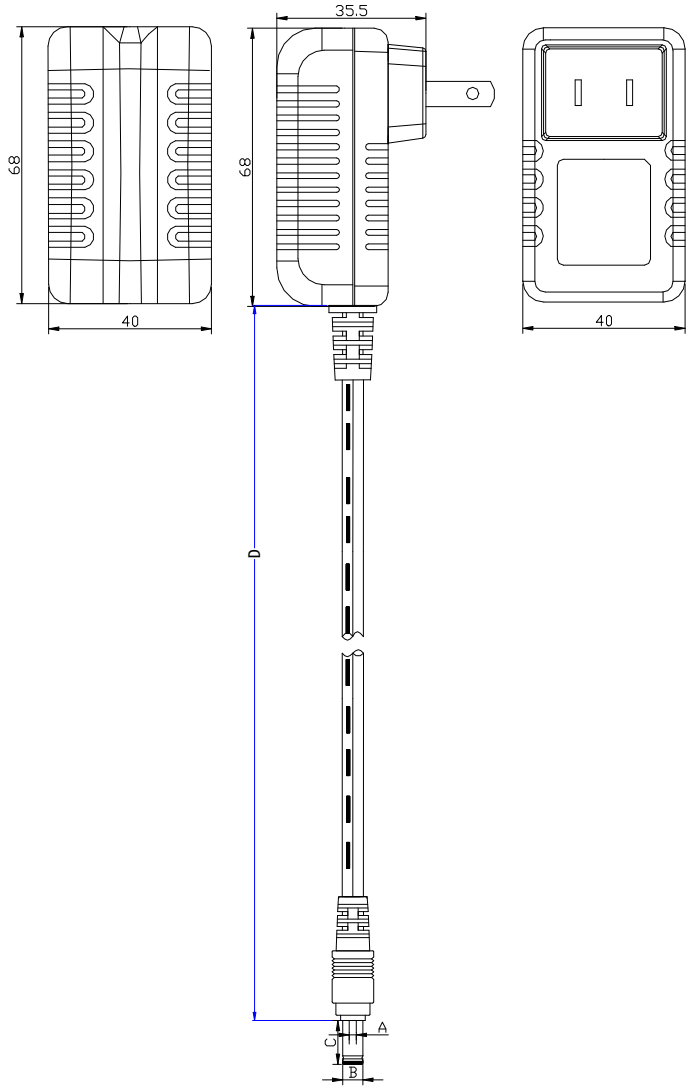

Unit : mm

	ΦA	ΦB	C	D
DIMENSION	1.35	3.5	8.5	1800
TOLERANCE	+0.1/-0	±0.1	±0.5	±50
REMARK	AWG24/2C UL2468 BLACK			

APPENDIX B

Label diagram (Unit: mm)

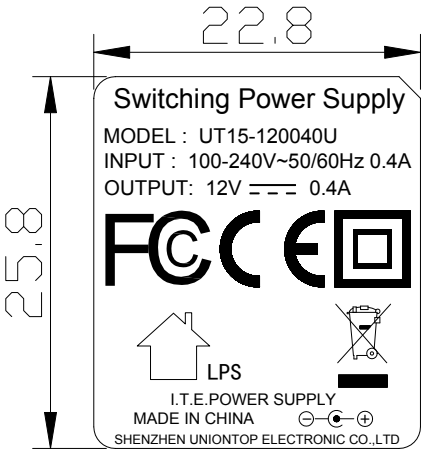

Notes:

1. Thickness: 0.1mm min., inflammation classes 94V-2 or better.
2. Color: Black background with White letters
3. Tolerance: -0.2mm

APPENDIX C

DC CORD

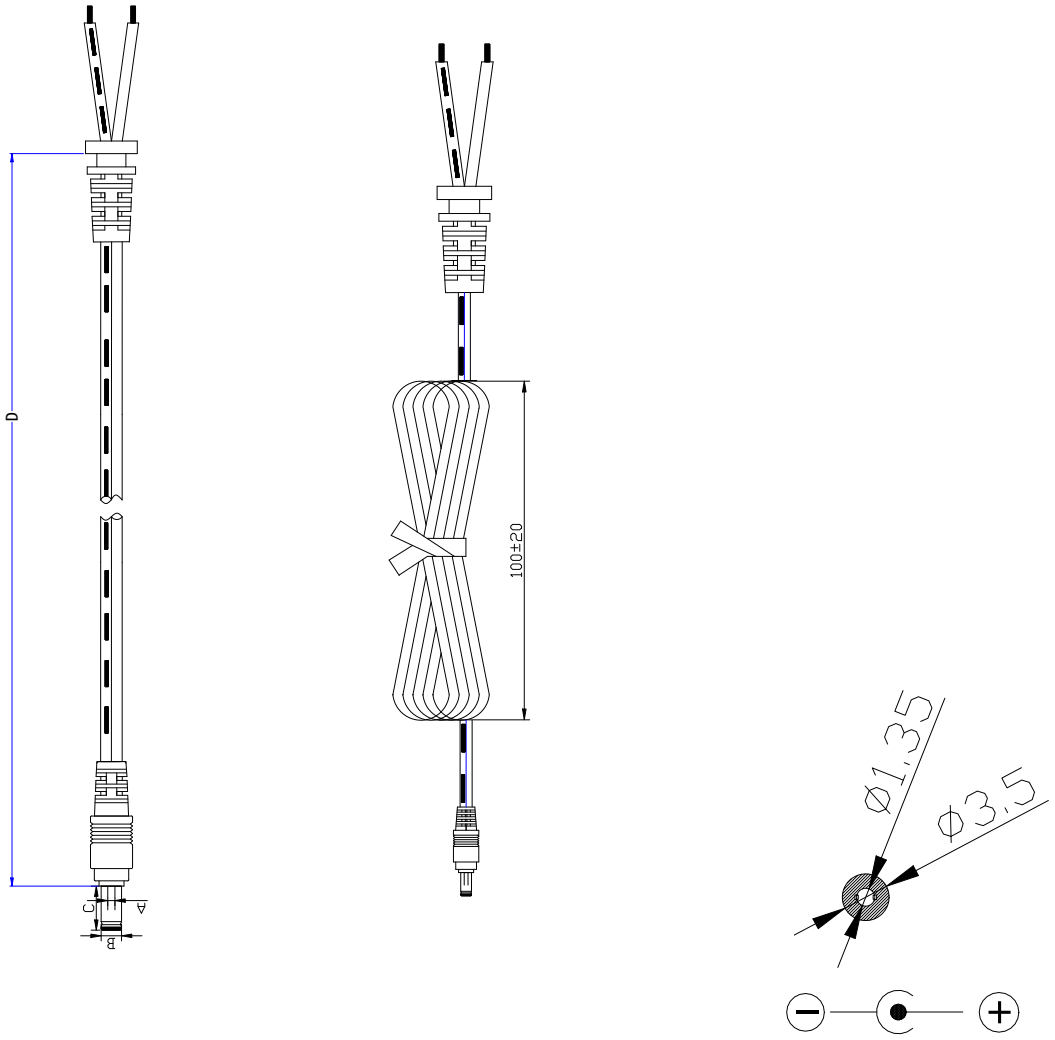

Unit: mm

	ΦA	ΦB	C	D
DIMENSION	1.35	3.5	8.5	1800
TOLERANCE	+0.1/-0	±0.1	±0.5	±50
REMARK	AWG24/2C UL2468 BLACK			

APPENDIX D

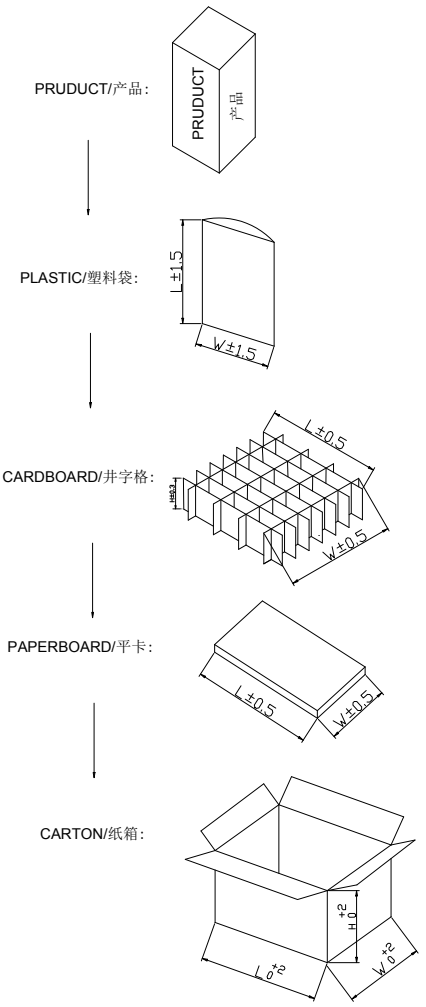

DIMENSION(UNIT IN cm):

	L	W	H
PLASTIC	13.0	18.0	/
CARDBOARD	46.0	420.0	11.0
PAPEROARD	46.0	42.0	/
CARTON	47.3	43.3	25.0

PACKING METHOD:

PAPERBOARD PLACEMENT METHOD	PUT A PAPERBOARD BETWEEN THE TOP AND BOTTOM,TOTAL 3PCS
PACKING METHOD	50PCS/LAYER X 2 LAYERS
QTY	100PCS
N.W.	94.8g
G.W.	13kg

REMARK:

1. **STORAGE CONDITION**
   TEMPERATURE: -10℃～+60℃ RELATIVE HUMIDITY: 30%～80%
2. **STORAGE PERIOD: 6 MONTHES**
3. **ANLISTATIG: NO REQUIREMENT**
4. **PLEASE ADVISE IF ANY COMMENTS ABOUT THE PACKING INFORMATION. OTHERWISE,THIS INFORMATION IS DEFAULTED AS CUSTOMER APPROVAL,AND WILL BE APPLIED TO PRODUCTION.**

UNION TOP	Model No.	UT15-120040U	Customer Part No.	

APPENDIX E

SAMPLE PRIMARY TEST REPORT

Test Items.	Test Condition	Unit	Sample Number and Test Result										Pass/ Fail
			1#										
Unload output voltage/(0.0A) 12±5%Vdc	100Vac	V	11.98										PASS
	240Vac	V	11.96										PASS
Rated load output voltage/ (0.4A)12±5%Vdc	100Vac	V	12.01										PASS
	240Vac	V	12.11										PASS
Output ripple & noise voltage≤ 300mV (test at full loading)	100Vac	mV	120										PASS
	240Vac	mV	100										PASS
Short-circuit protection test (Short at end of DC plug) (SCP≤6W)	100Vac	W	0.002										PASS
	240Vac	W	0.015										PASS
Over current Protection (OCP≤1.5A)	100Vac	A	0.71										PASS
	240Vac	A	0.76										PASS
Efficiency test (η≥72.02%)	100Vac	%	75.82										PASS
	240Vac	%	77.62										PASS
Hi-pot test	4242Vdc/10mA/ 1Minute		OK										PASS

NOTES: The products which are no use in the three months need to aging test

三个月内完全不使用的产品需做老化测试

UNION TOP	Model No.	UT15-120040U	Customer Part No.	

APPENDIX F

SAMPLE TEST REPORT

Items No	Test Items	Unit	Test condition & result				Spec. Limit	Pass/ Fail
			90Vac 60Hz	115Vac 60Hz	230Vac 50Hz	264Vac 50Hz		
1	Unload input current	mA	1.98	1.7	1.5	1.57	—	-
2	Unload input power	W	0.05	0.05	0.06	0.07	—	-
3	Rated load input current	mA	120.9	102	64	60	⩽ 400mA	PASS
4	Rated load input power	W	6.37	6.25	6.22	6.27	—	-
5	Unload output voltage(0.0A)	V	11.95	11.95	11.94	11.94	12±5% Vdc	PASS
6	Rated load output voltage(0.4) A	V	11.97	12	12.1	12.12	12±5% Vdc	PASS
7	Rated load Output ripple&noise voltage (300 mV)	mV	120	120	100	100	⩽300mVp-p	PASS
8	Short-circuit test (Pin&Iout)	W	0.0013	0.002	0.01	0.016	⩽6W	PASS
9	Over current protection	A	0.71	0.72	0.74	0.74	OCP⩽1.5A	PASS
10	Output overshoot	%	0.166	0.41	1.33	1.5	⩽10%	PASS
11	Turn on delay time	mS	/	/	/	/	⩽3000mS	
12	Hold up time	mS	/	/	/	/	⩾10mS/(115Vac) ⩾20mS/(230Vac)	
13	Efficiency	%	75.16	76.80	77.81	77.32	⩾72.02%	PASS
14	Hi-pot test	Pri. to Sec. : 4242Vdc, 1Minute, Cut off current ⩽10mA						PASS
15	Max. and Light load change test	Max. load to Light load : OK Light load to max. load: OK (90-264Vac)						
16	Burn-in	Burn-in 4 Hrs, The sample OK						
17	Appe. label and fusion	Appearance: OK, Label: OK, Fusion: OK						

UNION TOP	Model No.	UT15-120040U	Customer Part No.	

APPENDIX G

Energy Star TEST REPORT

Items No.	Test parameter	Unit	Input voltage 115Vac/60Hz						Spec. Limit	Pass /Fail
			100%	75%	50%	25%	0%	Aver.Eff		
1	Input current	mA	102	80.4	57	32	1.7		≤400mA	Pass
2	Input power	W	6.27	4.68	3.14	1.6	0.05		-	-
3	Output current	A	0.4	0.3	0.2	0.1			-	-
4	Output voltage	V	12.01	11.98	11.81	11.78			-	-
5	Power factor	-	/	/	/	/			-	-
6	Efficiency	%	76.61	76.79	75.22	73.62		75.56	≥72.02%	Pass

Items No.	Test parameter	Unit	Input voltage 230Vac/50Hz						Spec. Limit	Pass /Fail
			100%	75%	50%	25%	0%	Aver.Eff.		
1	Input current	mA	63.9	51	36.4	20.6	1.4		≤ 400mA	Pass
2	Input power	W	6.23	4.67	3.2	1.64	0.06		-	-
3	Output current	A	0.4	0.3	0.2	0.1			-	-
4	Output voltage	V	12.11	12.07	11.85	11.83			-	-
5	Power factor	-	/	/	/	/			-	-
6	Efficiency	%	77.75	77.53	74.06	72.13		75.36	≥ 72.02%	Pass

Note: 1. Aver.Eff.Spec.(≥ 72.02% Unload input power Spec.(≤0.3W)for CEC LEVEL /)